Spherical roller bearings, cylindrical and tapered bore

Principal dimensions			Basic load ratings		Fatigue load limit	Speed ratings		Mass	Designation
			dynamic	static		Reference speed	Limiting speed		
d	D	B	C	C0	Pu				* - SKF Explorer bearing
mm			kN		kN	r/min		kg	-
360	600	192	4300	6950	490	750	1000	215	23172 CCK/W33 *

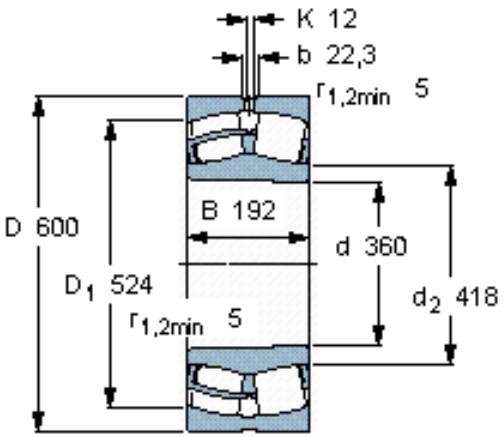

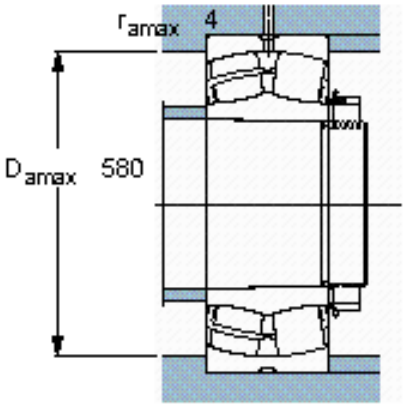

Calculation factors

e 0,30
Y_1 2,3
Y_2 3,4
Y_0 2,2