Spherical roller bearings, cylindrical and tapered bore

Principal dimensions			Basic load ratings		Fatigue load limit	Speed ratings		Mass	Designation
			dynamic	static		Reference speed	Limiting speed		
d	D	B	C	C0	Pu				* - SKF Explorer bearing
mm			kN		kN	r/min		kg	-
260	540	165	3550	4550	325	850	1100	185	22352 CCK/W33 *

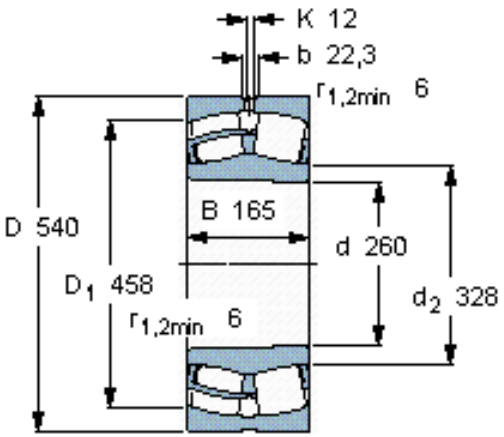

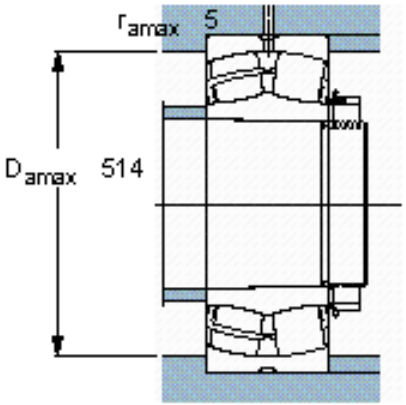

Calculation factors

e 0,31
Y_1 2,2
Y_2 3,3
Y_0 2,2