Spherical roller bearings, cylindrical and tapered bore

Principal dimensions			Basic load ratings		Fatigue load limit	Speed ratings		Mass	Designation
			dynamic	static		Reference speed	Limiting speed		
d	D	B	C	C0	Pu				* - SKF Explorer bearing
mm			kN		kN	r/min		kg	-
200	360	128	1860	2700	228	1200	1700	56,5	23240 CCK/W33 *

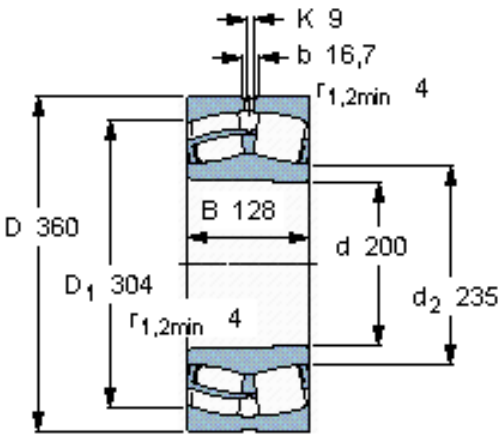

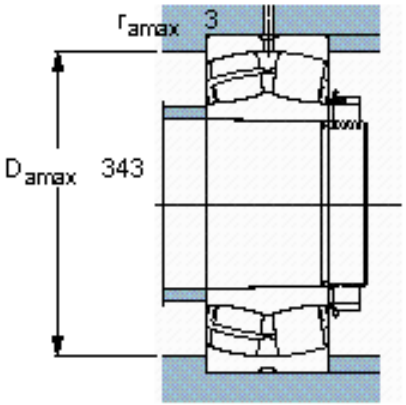

Calculation factors

e 0,35
Y_1 1,9
Y_2 2,9
Y_0 1,8